OCCUPATIONAL RISK PREVENCION MANUAL
CONCRETE MIXER TRUCK

FÓR-MATE
TRAINING ACADEMY

INDEX

MODULE I
CONCRETE MIXER TRUCK

1. OBJETIVE
2. IDENTIFICATION OF THE MACHINE
    - VAT ROTATION
    - CONTROLS
    - COMMISSIONING OF THE CONCRETE MIXER
    - PHASES FOLLOWED IN A WORK CYCLE
3. RISKS IDENTIFIED
    - DIRECT RISKS
    - INDIRECT RISKS
4. SECURITY SYSTEMS
5. SAFETY STANDARDS
6. PERSONAL PROTECTION
7. LEGISLATION CONCERNED
8. BIBLIOGRAPHY

MODULO I
CONCRETE MIXER TRUCK

OBJETIVE

To make known the main risks of the machine in its different phases of work and the most appropriate safeguards aimed at avoiding the actualization of these risks.

IDENTIFICATION OF THE MACHINE

The concrete mixer truck consists of a rotating drum supported by a truck frame suitable for carrying the weight.

The tank or rotating drum is cylindrical or biconical in shape and is mounted on the rear part, where the mixing of the components takes place. This tank rests on the chassis by means of supports and rollers.

Inside the tank, the paddles provide uniform longitudinal mixing of the concrete and fast pouring. Their orientation can be modified, either to facilitate mixing at the bottom, during transport or to collect the concrete during pouring.

In the upper rear part of the vat, there is an open loading hopper, with a steep slope towards the inside of the vat. The unloading is installed in the lower rear part of the vat, consisting of a chute oriented in a 180o rotation and with an inclination that can be adjusted by means of a manual mechanical or hydraulic system.

Tank rotation

The vat can be driven in several ways:

- Independently: by means of an auxiliary engine, usually diesel, with mechanical or hydraulic transmission.

- By mechanical transmission: from a power take-off, either in the truck's engine gearbox or at the front end of the truck.

- By hydraulic transmission: by means of a power take-off connected to the crankshaft which drives a variable displacement hydraulic piston pump.

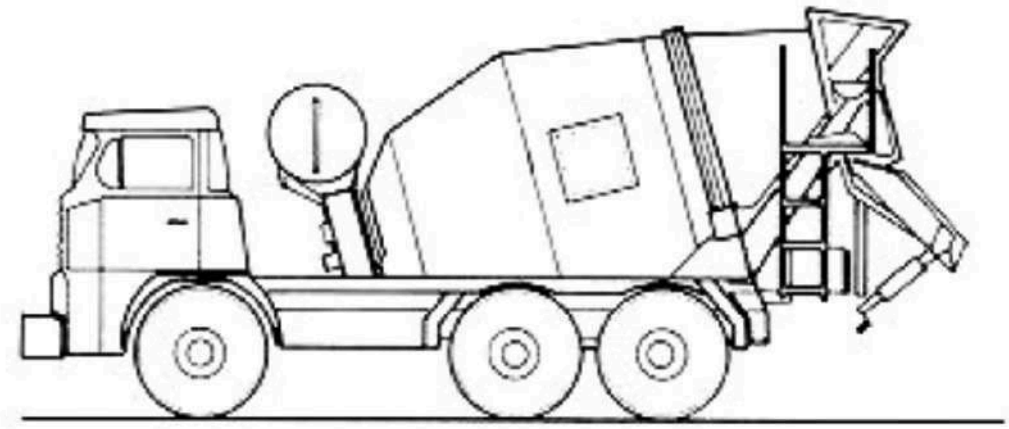

Controls

The control system normally used is located at the rear of the concrete mixer frame and can be divided into three main parts:

- Lever for determining the direction of rotation of the tank (a).
- Throttle for adjusting the speed of rotation of the carrier vehicle (b).
- Lever locking device (c). (not all are fitted).

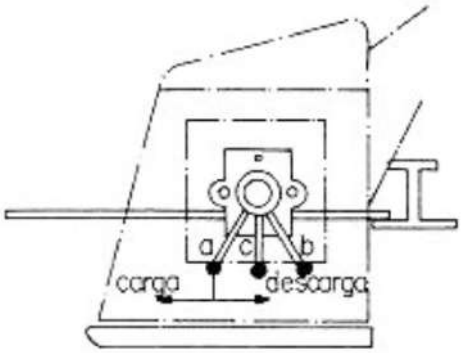

Commissioning of the concrete mixer

The engine of the transport vehicle is started.

The locking device (c) is released.

A little throttle is given with the throttle lever (b).

The lever (a) is moved. The vat will then start to rotate in the loading-mixing-moving direction or in the unloading direction, depending on the direction of rotation.

Phases followed in a work cycle

The operations performed by the truck driver to cover a complete cycle are described:

The truck is started and the truck is driven until the loading hopper is positioned directly below the discharge hopper of the concrete batching plant.

The truck driver gets off the truck and tells the concrete batching plant operator the quantity of concrete required in cubic metres and operates the controls in the loading position and at the loading speed.

The water tank is filled while charging is in progress.

When the bucket is loaded, an acoustic signal sounds and the operator puts the bucket in the mixing position and proceeds to get into the truck to go to the construction site.

On arrival at the construction site, the vat is rotated at a higher speed than the transport speed to ensure proper mixing.

The operator, using a shovel, clears the loading hopper of concrete waste by climbing to the top of the access ladder to the loading hopper.

The concrete is discharged with the help of a bucket or directly with the help of troughs.
The outlet troughs are cleaned with a hose.
The remainder of the water is put into the cleaning vat and then returned to the concrete batching plant.

On arrival at the plant, the water is discharged from inside the vat, which has been cleaning the walls of the vat of concrete along the way.

RISKS DETECTED

Direct risks

During loading: risk of projection of concrete particles onto the driver's head and body as they are not picked up by the loading hopper.

During transport: risk of hitting third parties with the outlet chute when it is unfolded due to poor fastening, breakage of the chute or simply because it has not been fastened after unloading. Concrete falling out of the hopper due to overfilling.

During unloading: blows to the head when unfolding the chute.
Entrapment of fingers or hands in the joints and joints of the chute when unfolding the chute.

Knocks to the feet when transporting the auxiliary chutes or when connecting them to the outlet chute due to not following the handling rules.

Knocks to third parties located within the turning radius of the chute due to the chute not being fixed and people not being close to the concrete unloading operation.

Indirect risks

General: Risk of rollover during normal operation of the vehicle due to human factors (short-sightedness and not wearing glasses, nervousness, heart attacks, loss of consciousness, altered blood pressure, drunkenness, lack of responsibility, slow reflexes), mechanical (incorrectly fitted parts, brake failure, tyre wear or underinflated tyres).

Risk of fire due to a short-circuit in the electrical installation, fuel, etc., due to technical or human error.

Risk of vehicle slippage due to slippery road surfaces, vehicle tyres in poor working order, working in swampy terrain or on steep slopes.

During unloading: blows by the bucket when lowering or raising the bucket loaded with as a consequence of a bad handling of the transport system used.

Knocks from objects falling from the top of the construction site.

Contact of hands and arms with concrete.

Crushing by the bucket when the bucket detaches due to a failure in the conveying system.

Concrete falling on workers below the path of the discharge chutes.

Trapping of hands between the bucket and the outlet chute when the bucket is lowered empty and the driver catches the bucket so that it is in the correct position when it is lowered.

Entrapment of the feet between the base structure of the bucket and the ground when the bucket is lowered for loading.

During maintenance:

From the concrete mixer: risk of falling from height from the top of the access ladder to the loading hopper during inspection and cleaning work.

Risk of falling from height from the top of the tank as a result of climbing up to inspect or carry out painting work, etc.

Risks of acoustic stress when working inside the vat with a pneumatic hammer used to break up the hardened concrete due to a breakdown in the concrete mixer.

Risk of slipping and falling during greasing operations due to accumulated oils and grease on the floor.

Injuries and scratches on the sharp edges of the vehicle. Inhalation of vaporised or atomised oils used for spring lubrication.

Hand and head injuries from high-pressure guns.

From the truck: Risk of entrapment between the chassis and the truck body in its raised position during repair, greasing or overhaul operations carried out by the truck driver.

Risk of knocks, sprains and various injuries resulting from the misuse of tools used in the repair of vehicles.

SECURITY SYSTEMS

Concrete mixer

Loading hopper: this consists of a funnel-shaped part located at the rear top of the truck. A suitably sized hopper will prevent the projection of concrete particles on elements and people near the truck during the loading process of the concrete mixer. The minimum dimensions are considered to be 900 x 800 mm.

Access ladder to the hopper: The ladder shall be constructed of sturdy material and, if possible, slip-resistant. At the bottom of the folding ladder there shall be a safety device to prevent swaying, which shall be fixed to the ladder itself when it is folded up and to the truck when it is unfolded. It must also have a platform at the top for the operator to stand on in order to observe the state of the loading hopper and to carry out cleaning work, equipped with a 90 cm. high safety ring above it.

The platform must be approximately 400 x 500 mm. in size and made of sturdy material. To avoid accumulation of dirt, it must be of the grid type with an approximate size of the maximum free section of 50 mm. on each side.

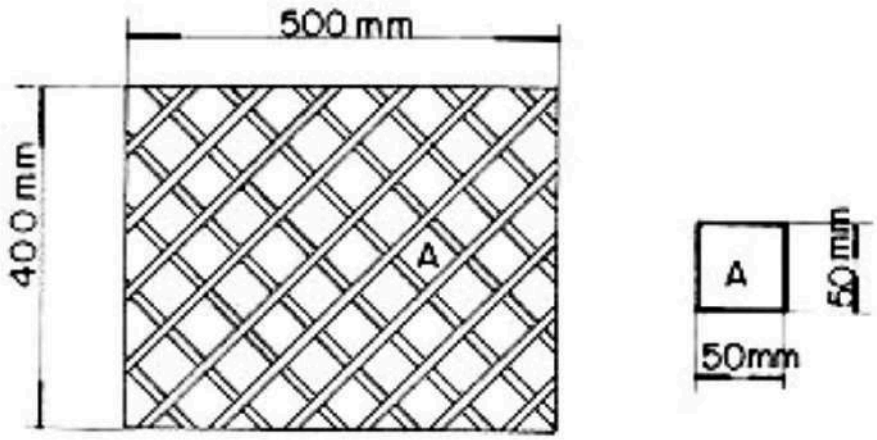

The ladder must only be used for maintenance, cleaning and inspection work by a single operator and the locks must be engaged both before climbing and after retracting the folding part of the ladder. It may only be used when the vehicle is stationary.

NORMAS DE SEGURIDAD

On the material agent

- Concrete mixer. The concrete mixer must not have any protruding parts that could injure or hit the operators. The elements of the concrete mixer such as exit chutes, ladders, mudguards, etc., must be painted with anti-corrosion paint to prevent them from breaking and injuring operators over time.

  Do not climb into the concrete mixer's bucket even when it is at a standstill. Any repairs or checks must be carried out using auxiliary equipment such as scaffolding, etc.

  For the visibility of the parts of the concrete mixer at night, the rear parts of the concrete mixer (tank, hoppers, chutes, etc.) shall be painted with black and white stripes of reflective paint.

- Truck: The vehicle must have hydraulic brakes with double independent circuits for both front and rear axles. The elements for raising and lowering must be non-slip.
  They must have the signalling devices required by the highway code.
  Low air tyre alarm systems. Reversing signal audible by other trucks.

  Cabs must be of such strength and installed in such a way as to provide adequate protection for the driver against falling objects.

  Cabs must have a ventilation and heating system.
  The cab must be fitted with a fixed seat for the driver and for passengers authorized to travel in the cab.

  Seats must be constructed so as to absorb vibrations sufficiently, have a backrest and a footrest and be comfortable.

- Emergency equipment: Trucks must carry the following equipment: a first aid kit, a fire extinguisher for carbonic snow or halogenated components with a minimum capacity of 5 kg, essential tools for road repairs, spare lamps, flashing lights, reflectors, etc.

On ancillary elements

Concrete outlet chutes: To unfold the chute, remove the locking screws and rotate it to the unloading position; once there, remove the safety chain and hold it by the end and rotate it to the unfolded position. Avoid putting your hands between the joints of the troughs when unfolding.

When unfolding the chute, the operator must never stand in the turning path of the chute in order to avoid any type of impact. The auxiliary chutes must be fastened to the truck frame by means of locking chains and a locking device.
After each concrete step they must be cleaned with a flush of water.

On the working method

When unloading onto a bucket transported by crane, the lorry driver and the operator helping to load the bucket shall be separated from the area where the bucket is lowered, always keeping an eye on the bucket's evolution.

If, due to the situation of the crane operator, he must be accompanied in his descent to the bucket, this shall be done taking care not to position himself between the bucket and the rear part of the concrete mixer to avoid entrapment between both elements.

Special care must be taken with the position of the feet when lowering the bucket to avoid the bucket catching them on the ground.

Once the bucket is loaded and the chute is separated, both operators must move away from each other to avoid being hit by an unexpected load swing.

On truck driving

When a lorry is driving around the worksite, it is essential to dedicate a worker to ensure that the vehicle's path is clear before the vehicle is driven forward and, above all, backward.

Trucks must be driven with great caution: on steep, uneven, soft, slippery or other hazardous terrain, along ditches or embankments, in reverse. Do not get out of the truck unless: the vehicle is stationary, there is sufficient space to alight.

When moving the lorry, no person shall: stand or sit in a dangerous place, pass from one vehicle to another, apply wheel chocks, carry arms or legs hanging from the outside.

If the truck mixer is equipped with an auxiliary engine, it can be braked by setting a gear in addition to the corresponding handbrake; if the truck mixer is equipped with a hydraulic engine, the truck's wheels must be chocked, as the truck's engine is continuously running. On slopes of more than 16% it is advisable not to deliver concrete with the truck.

At the end of the service and before leaving the truck mixer, the driver must: apply the handbrake, engage a low gear and, if necessary, block the wheels with wheel chocks.

For maintenance work using hand tools, the following rules should be followed: select the most suitable tools for the work to be carried out, make sure that they are in good condition, use them properly, store them in the dedicated box or room at the end of the work. When using pressure grease guns, never place your hands in front of the nozzles.

When lubricating springs by spraying or atomisation, the worker shall stand clear of the lubrication jet, which settles rapidly, and at all times take care not to direct it at other persons.

When the concrete has set in a vat for any reason, the operator handling the pneumatic hammer shall wear hearing protection helmets so that the maximum sound level is 80 dB.

PERSONAL PROTECTIONS

When unloading concrete, the lorry driver must wear class A type 2 gloves, B.O.E. no. 158 of 4 July 1977, tight-fitting work clothes and a helmet approved in accordance with Norma Técnica Reglamentaria MT-1, B.O.E. no. 312 of 30 December 1974.

The use of helmets shall be limited to the moment when the lorry driver enters or is in the vicinity of the site and leaves the cab to unload. He shall also be provided with suitable footwear to enable him to drive lightly and safely. The driver or operators who carry out the work of breaking the hardened concrete inside a vat must be equipped with approved Class A earmuff-type ear protectors, in accordance with Regulatory Technical Standard MT-2, B.O.E. n 209 of 1 September 1975

Legislation concerned

General Ordinance on Safety and Hygiene at Work O.M. 9-3-78 in its Articles 18, 31, 32, 82, 89, 90, 92, 92, 94, 95, 96, 138, 142, 143, 147, 148 and 149.

Construction, Glass and Ceramics Labour Ordinance, Order of August 28 1.970 in its Articles 277, 278, 279 and 280.

Bibliography

(1) NATIONAL SAFETY COUNCIL. Accident Prevention Manual for industrial operations. Madrid, Editorial Mafre, S.A., 1997.

(2) TAMBORERO DEL PINO, JOSE M. Concrete mixer truck. Barcelona, I.TB. /546478.

(3) A. PEREZ GUERRA. Seguridad en el Trabajo de Construcción de Edificios. Barcelona, Daniel Pérez Guerra, May 1969 edition.

(4) CATÁLOGOS DE INFORMACIÓN DE LAS EMPRESAS: Cranier, S.A.E. Erim, S.A. Crem, S.A. GUIA NTP 093, NTP 121

You are done!

Click here: Start Test

FÓR-MATE
ACADEMIA DE FORMACIÓN